karenina

WEBERT
italian design
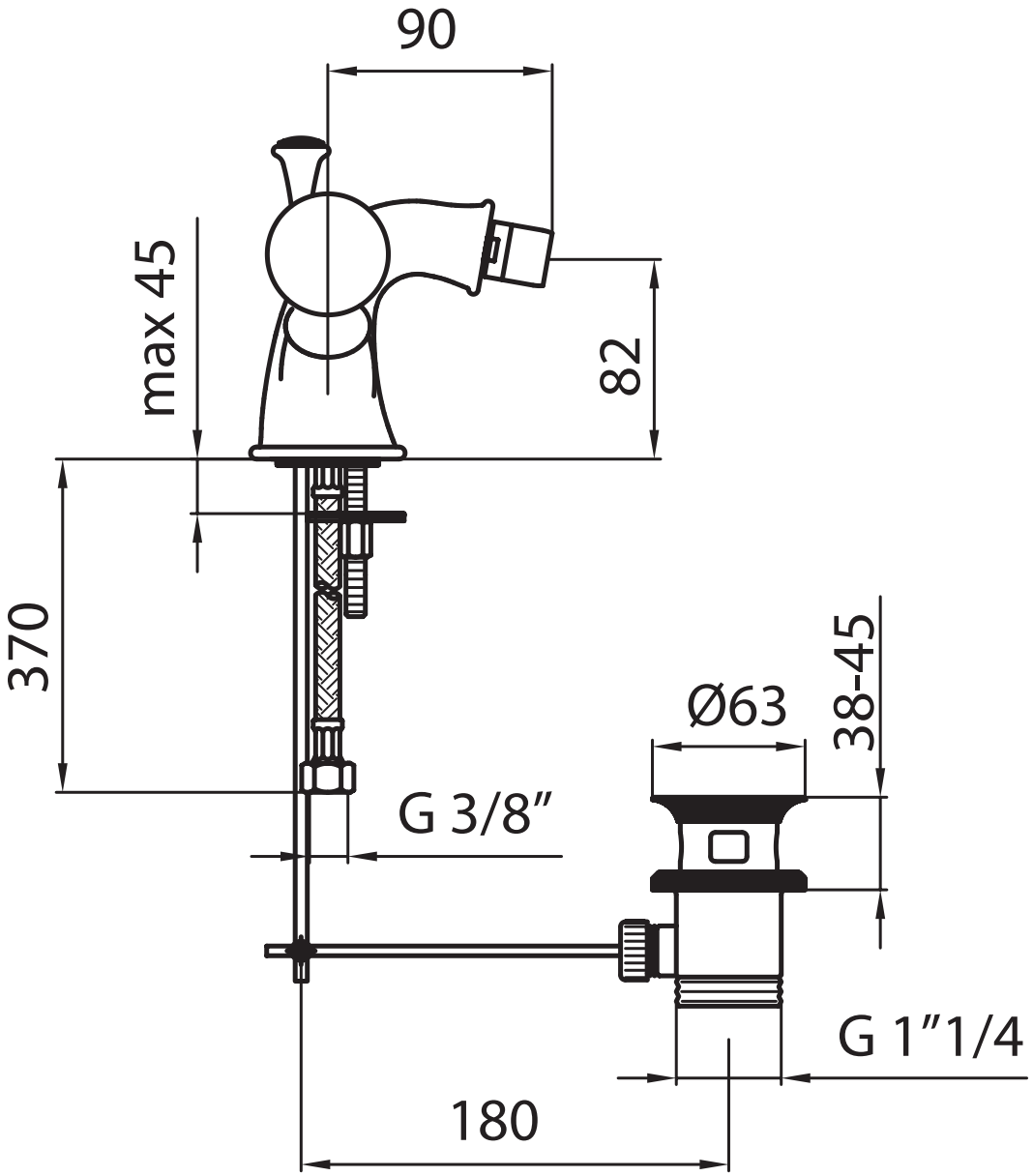
■ **KA710101**